MBR20CT Series Schottky Barrier Rectifiers

Features

- High efficiency operation
- Low power loss
- Low stored charge majority carrier conduction
- High forward surge capability
- Lead free in compliance with EU RoHS 2011/65/EU directive
- Green molding compound as per IEC61249 Std..(Halogen Free)

Mechanical Data

- Circuit figure: Common cathode
- Leads: Solderable per mil-std-202, Method 208
- Polarity: as marked
- Mounting torque: 5 in-lbs maximum
- Terminals: Puretin plated
- Weight: TO-220AB 1.85 grams
  ITO-220AB 1.70 grams
  TO-252 0.35grams
  TO-263(D^2PAK) 1.35 grams

Package outline

Dimensions in millimeters

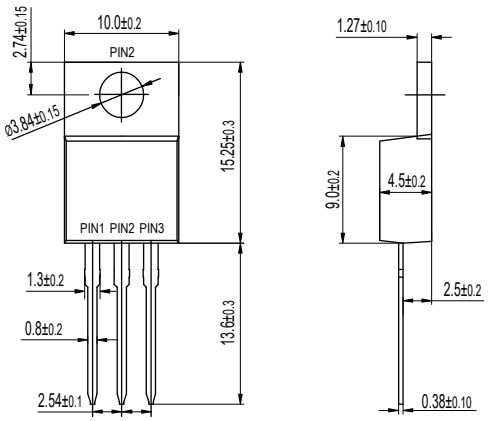

TO-220AB
MBR20XXCT

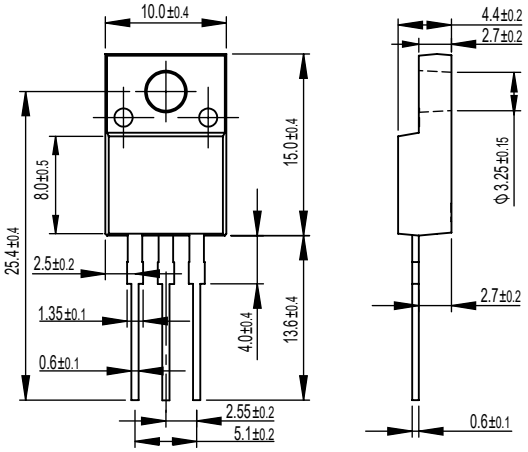

ITO-220AB
MBR20XXFCT

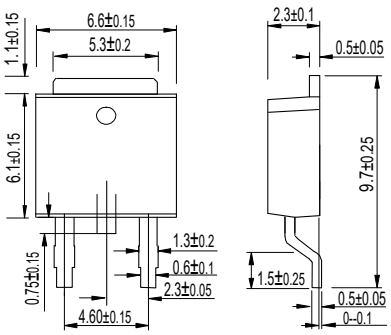

TO-252
MBR20XXBCT

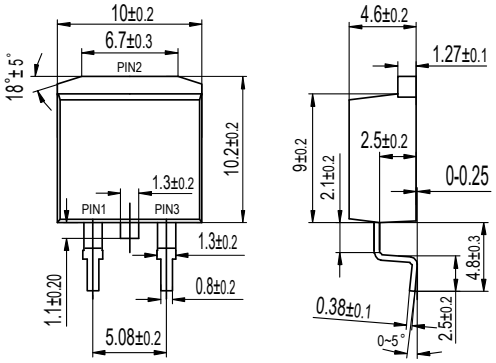

TO-263(D^2PAK)
MBR20XXDCT

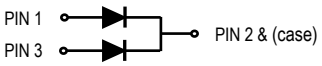

MAXIMUM RATINGS AND ELECTRICAL CHARACTERISTICS (TA=25°C)

RATINGS	SYMBOL	MBR 2040CT 2040FCT 2040BCT 2040DCT	MBR 2045CT 2045FCT 2045BCT 2045DCT	MBR 2060CT 2060FCT 2060BCT 2060DCT	MBR 20100CT 20100FCT 20100BCT 20100DCT	MBR 20150CT 20150FCT 20150BCT 20150DCT	MBR 20200CT 20200FCT 20200BCT 20200DCT	UNIT
Maximum repetitive reverse voltage	V_{RRM}	40	45	60	100	150	200	V
Maximum RMS voltage	V_{RMS}	28	32	42	70	105	140	V
Maximum DC blocking voltage	V_{DC}	40	45	60	100	150	200	V
Maximum average forward current per device per diode	I_{AV}	20 10						A
Peak forward surge current, 8.3ms single half sine-wave superimposed on rated load	I_{FSM}	220						A
Typical thermal resistance (Note 1) TO-220AB ITO-220AB TO-252 TO-263(D^2PAK)	$R_{\theta-JC}$	2.5 4.5 3.5 2.5						°C/W
Operating junction temperature range	T_J	-55 to +150				-55 to +175		°C
Storage temperature range	T_{STG}	-55 to +175						°C
CHARACTERISTICS	SYMBOL	MBR 2040CT 2040FCT 2040BCT 2040DCT	MBR 2045CT 2045FCT 2045BCT 2045DCT	MBR 2060CT 2060FCT 2060BCT 2060DCT	MBR 20100CT 20100FCT 20100BCT 20100DCT	MBR 20150CT 20150FCT 20150BCT 20150DCT	MBR 20200CT 20200FCT 20200BCT 20200DCT	UNIT
Maximum forward voltage per leg at I_F=10A	V_F	0.65		0.75	0.85	0.92		V
Maximum average reverse current at rated DC blocking voltage T_J=25°C T_J=125°C	I_R	0.10 15			0.01 5			mA

Notes: 1. Thermal resistance from junction to case.

FIG. 1 - TYPICAL FORWARD CURRENT DERATING CURVE

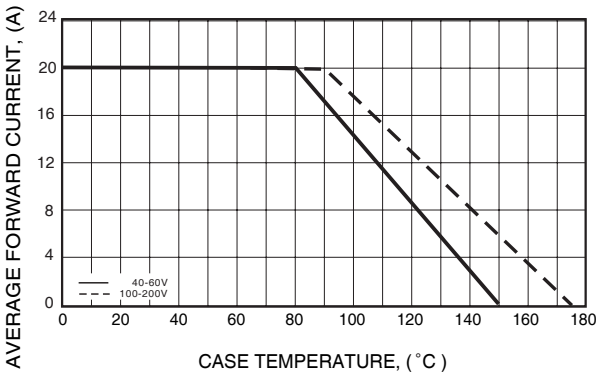

FIG. 2 - MAXIMUM NON-REPETITIVE FORWARD SURGE CURRENT

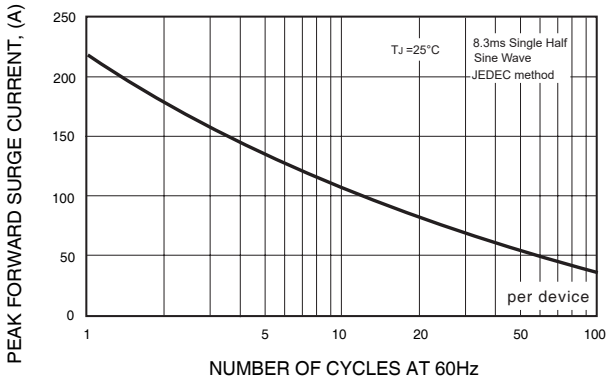

FIG. 3 - TYPICAL REVERSE CHARACTERISTICS

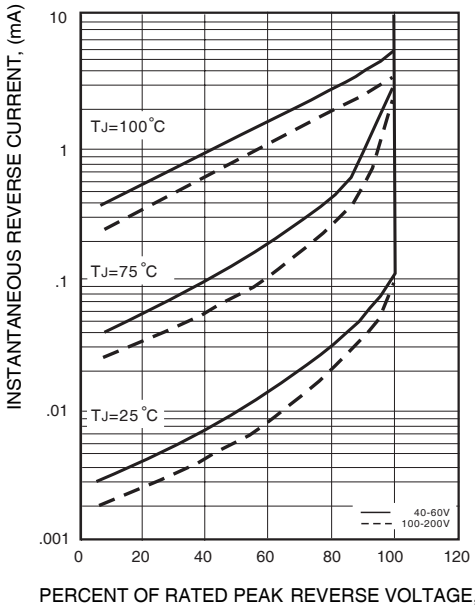
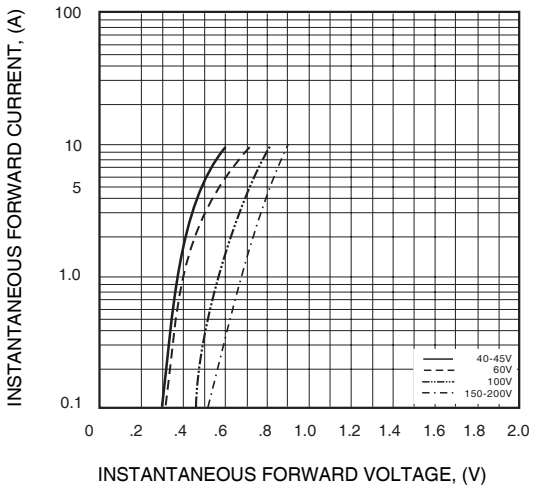
FIG. 4 - TYPICAL INSTANTANEOUS FORWARD CHARACTERISTICS